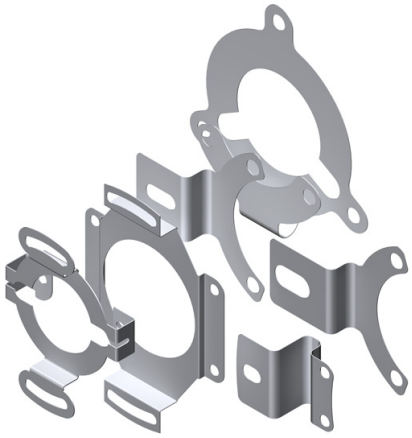

# SYSTÈME ANTI-ROTATION

## SYSTÈMES ANTI-ROTATION FLEXIBLES

| Référence | Séries appropriées | Vis de fixation |
|---|---|---|
| 90.1014 | 19, 50H, 59, 59S, PR90H | 5 M4 x 6 DIN912, DIN84 |
| 90.1018 | 19, 50H, 59, 59S, PR90H, E58HS, E58HM, SMRS19, SMRS59, SMRS59S | 3 M4 x 6 DIN912, DIN84 |
| 90.1020 | 19, 50H, 59, 59S, PR90H, 64, E58HS, E58HM, SMRS19, SMRS59, SMRS59S | 3 M4 x 6 DIN912, DIN84 |
| 90.1024 | 19, 50H, 59, 59S, PR90H, 64, E58HS, E58HM, SMRS19, SMRS59, SMRS59S | 3 M4 x 6 DIN912, DIN84 |
| 90.1025 | 77, 80 | 5 M4 x 6 DIN912, DIN84 |
| 90.1026 | 64 | 3 M4 x 6 DIN912, 3 M4 DIN127 |
| 90.1027 | 19, 59, 59S, PR90H, 64, 64S, 66, SMRS19, SMRS59, SMRS59S, SMRS64, SMRS64S | 4 M3 x 6 DIN7985, 4 M3 DIN127B |
| 90.1036 | 22, 22H, E36HM, E36HS | 2 M2,5 x 5 DIN7985, 2 M2,5 DIN6798A |
| 90.1037 | 22, 22H, E36HM, E36HS | 2 M2,5 x 5 DIN7985, 2 M 2,5 DIN6798A |
| 90.1038 | SMRS 64 | 4 M2,5 x 6 DIN912, 4 M2, 60 DIN127B |
| 90.1039 | 64, 64S, SMRS64, SMRS64S | 2 M3 x 6 DIN912, 2 M3 DIN127B |
| 90.1040 | 19, 59 | - |
| 90.1041 | 64, 64S, 66, 77, 80 | 1 M3 x 6 DIN912, 1 M3 DIN127 |
| 90.1045 | 19, 59, 59S, PR90H, 64, 64S, 66, E58HS, E58HM, SMRS19, SMRS59, SMRS59S, SMRS64, SMRS64S | 4 M3 x 6 DIN7985, 4 M3 DIN127 |
| 90.1046 | 64, 64S, SMRS19, SMRS59, SMRS59S, SMRS64, SMRS64S | 2 M3 x 6 DIN912, 2 M3 DIN127 |
| 90.1071 | 64, 64S, SMRS19, SMRS59, SMRS59S, SMRS64, SMRS64S | 2 M3 x 6 DIN7985, 2 M3 DIN127 |
| 90.1072 | 64, 64S, SMRS19, SMRS59, SMRS59S, SMRS64, SMRS64S | 2 M3 x 6 DIN7985, 2 M3 DIN127 |
| 90.1075 | 19, 50H, 59, 59S, PR90H, E58HS, E58HM | 3 M4 x 6 DIN912, 3 M4 DIN127 |
| 90.1076 | 19, 50H, 59, 59S, PR90H, E58HS, E58HM, SMRS19, SMRS59, SMRS59S | 2 M 4 x 6 DIN912, 2 M4 DIN127 |
| 90.1083 | 22, 22H, E36HS, E36HM | 2 M2,5 x 5 DIN7985, 2 M 2,5 DIN6798A |
| 90.1086 | 64, 64S, SMRS19, SMRS59, SMRS59S, SMRS64, SMRS64S | 2 M3 x 6 DIN912, 2 M3 DIN127B |
| 90.1095 | 19, 50H, 59, 59S, PR90H, 64, E58HS, E58HM, SMRS59, SMRS59S | 3 M4 x 6 DIN912, 3 M4 DIN127 |
| 90.1101 | 64, 64S | 4 M2,5 x 6 DIN912, 4 M2,60 DIN127B |
| 90.1108 | 80 | 6 M3 x 6 DIN912, 6 M3 DIN127B |
| 90.1109 | 77 | 6 M3 x 6 DIN912, 6 M3 DIN127B |
| 90.1110 | 50H | 2 M2,5 x 5 DIN7985, 2 M2,60 DIN127B |
| 90.1111 | 22, 22H, E36HM, E36HS | 2 M2,5 x 5 DIN7985, 2 M2,5 DIN6798A |
| 90.1116 | 28, E24HS | 3 M1,6 x 5 DIN7985 |
| 90.1119 | 77 | 6 M3 x 5 DIN912, 6 M3 DIN127B |
| 90.1124 | 67, 67S | 2 M4 x 6 DIN912 |
| 90.1129 | 67, 67S | 2 M3x 5 DIN912, 2 M3 DIN127**B** |
| 90.1132 | 22M | 2 M3x 6 DIN7985, 2 M3 DIN6798A |
| 93.0102085 | 22, 22H | 2 M2,5 x 5 DIN7985, 2 M2,5 DIN6798A |
| 93.0102086 | 50HI | 2 M2,5 x 6 DIN912 |
| 93.0102087 | 22, 22H, E36HS, E36HM | 2 M2,5 x 5 DIN7985, 2 M2,5 DIN6798A |

# SYSTÈME ANTI-ROTATION

## SYSTÈMES ANTI-ROTATION FLEXIBLES

| Référence | Séries appropriées | Vis de fixation |
|---|---|---|
| 93.0102090 | 19, 59, 59S, PR90H, E58HS, E58HM | 4 M3x6 DIN7985, 4 M3 DIN127B |
| 93.0102094 | 28 | 2 M 2 x 4 DIN912 |
| 93.0102112 | 22M | 2 M3 x 5 DIN912, 2 M3 DIN127B |
| 93.0102145 | 22, 22H, E36HS, E36HM | 2 M 2,5 x 5 DIN7958, 2 M2,5 DIN6798A |
| 93.0102150 | 22, 22H, E36HS, E36HM | 2 M 2,5 x 5 DIN7958, 2 M2,5 DIN6798A |

### 90.1014

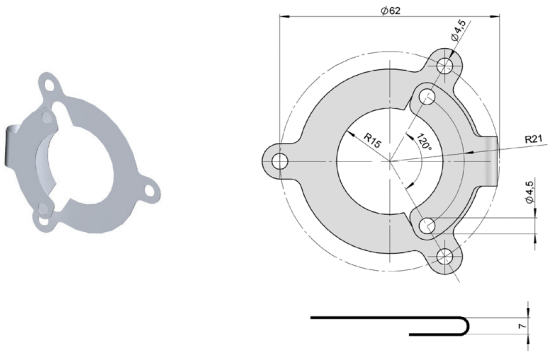


### 90.1018

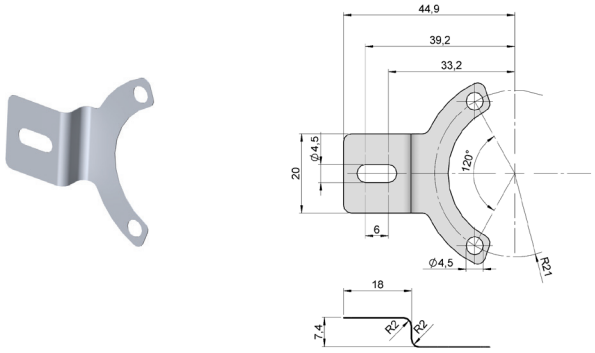


### 90.1020

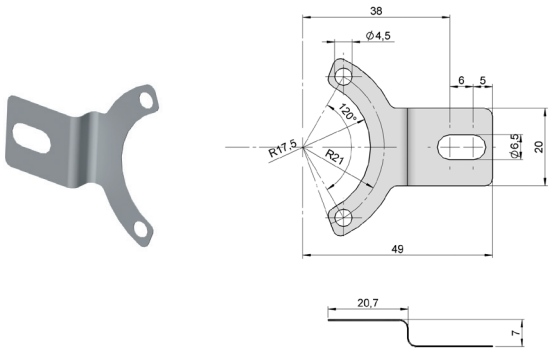


### 90.1024

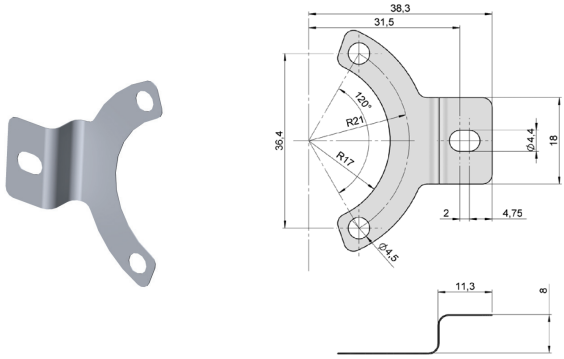


### 90.1025

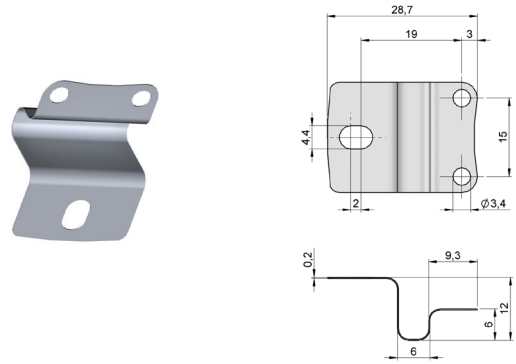


### 90.1026

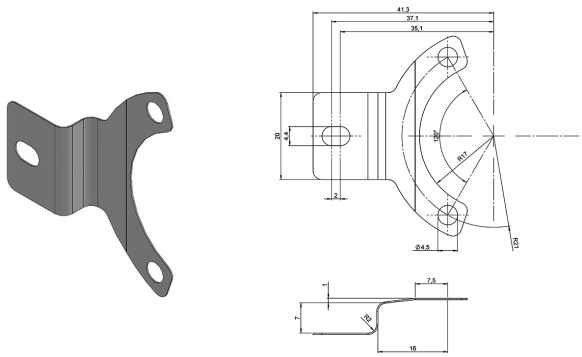

# SYSTÈME ANTI-ROTATION

## SYSTÈMES ANTI-ROTATION FLEXIBLES

### 90.1027

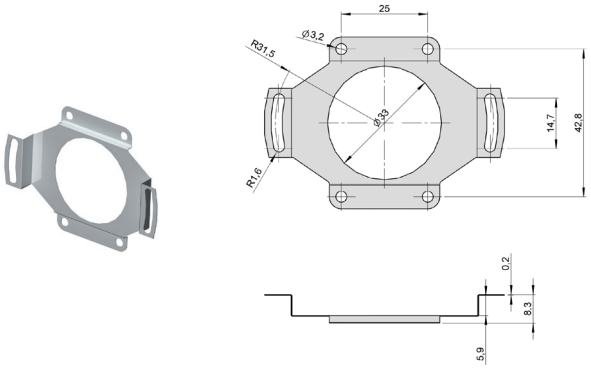


### 90.1036

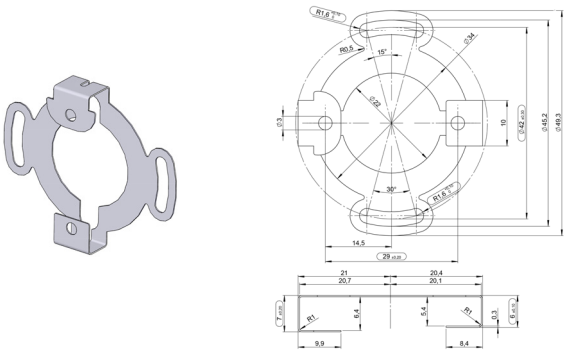

### 90.1037

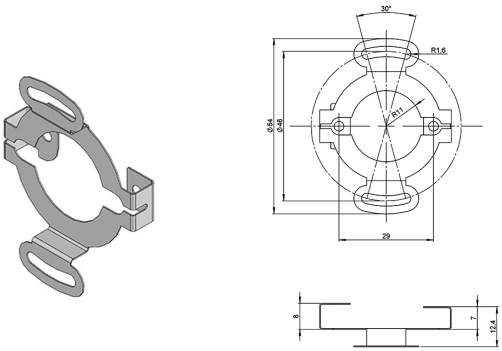


### 90.1038

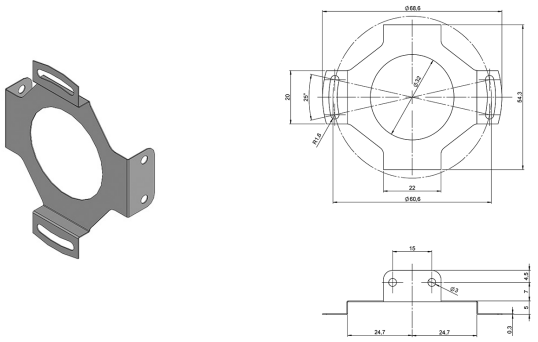

### 90.1039

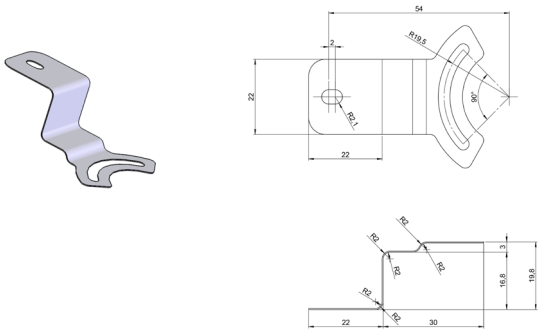


### 90.1040

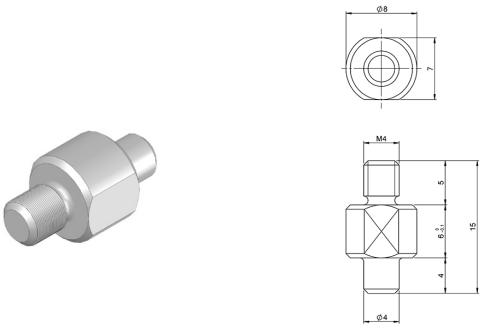


### 90.1041

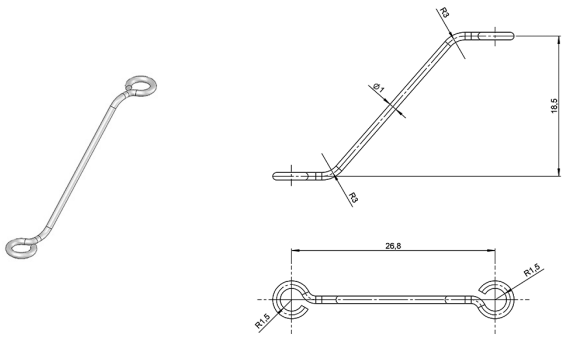


### 90.1045

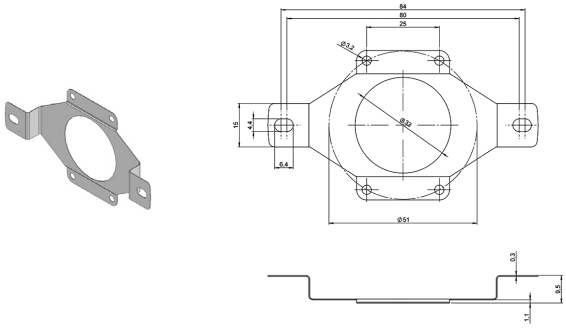

# SYSTÈME ANTI-ROTATION

## SYSTÈMES ANTI-ROTATION FLEXIBLES

### 90.1046

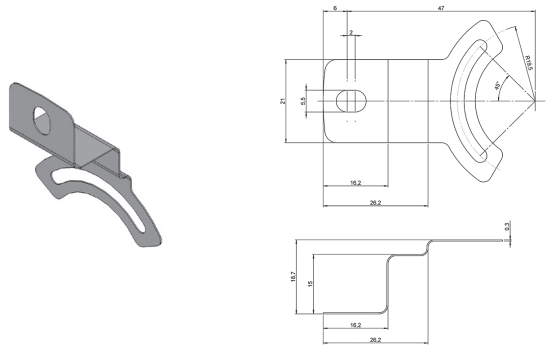

### 90.1071

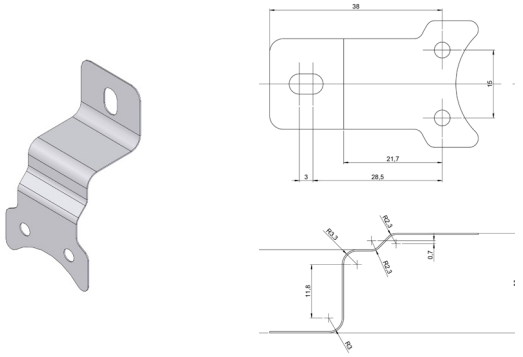

### 90.1072

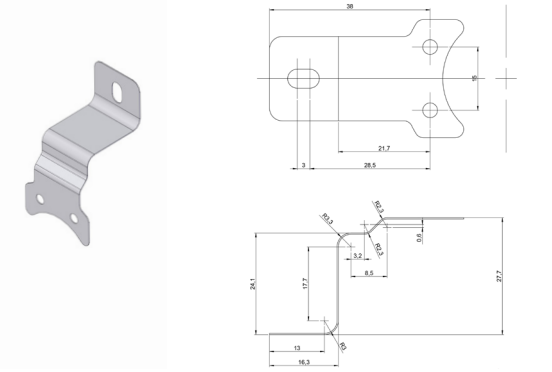

### 90.1075

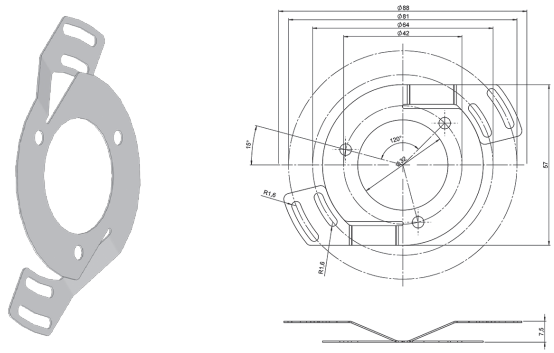

### 90.1076

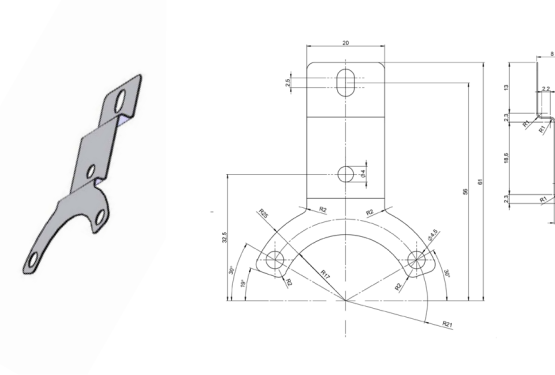

### 90.1083

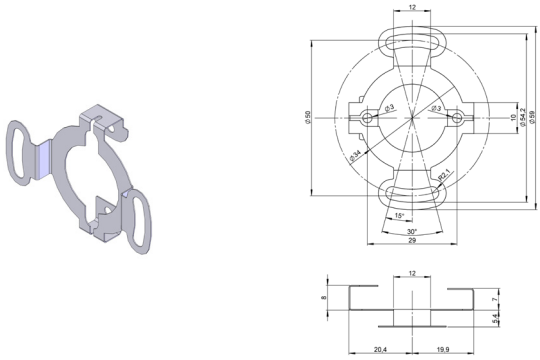

### 90.1086

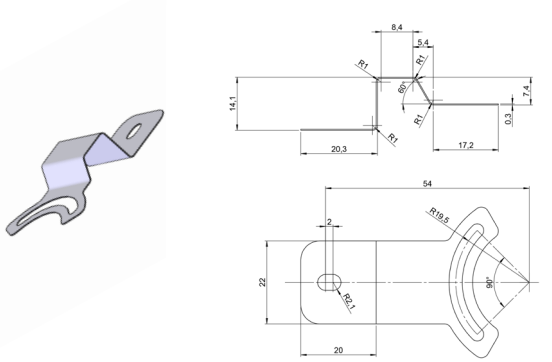

### 90.1095

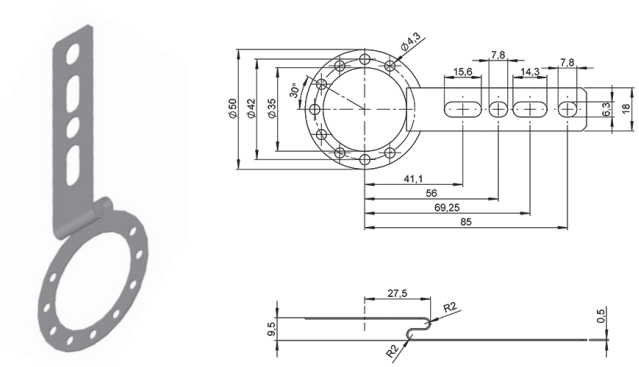

# SYSTÈME ANTI-ROTATION

## SYSTÈMES ANTI-ROTATION FLEXIBLES

### 90.1101

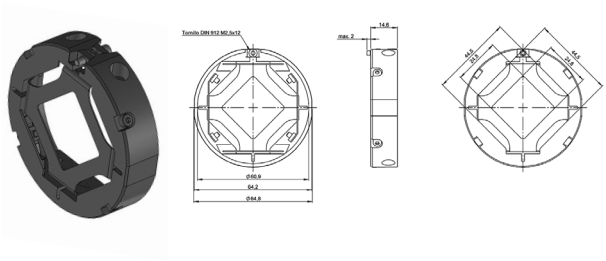

### 90.1108

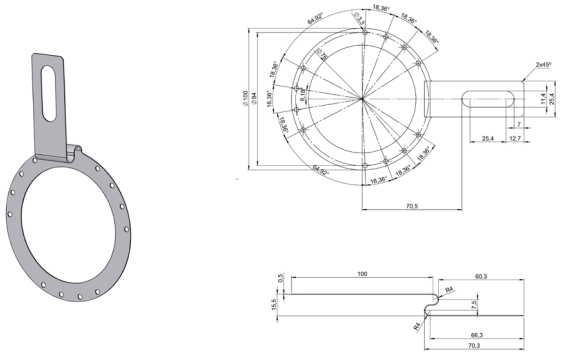

### 90.1109

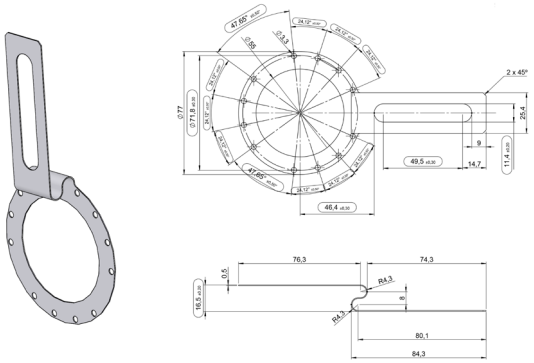

### 90.1110

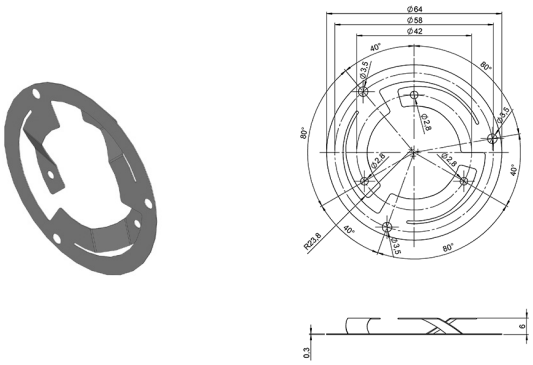

### 90.1111

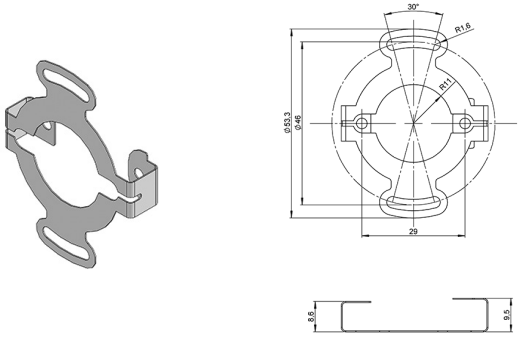

### 90.1116

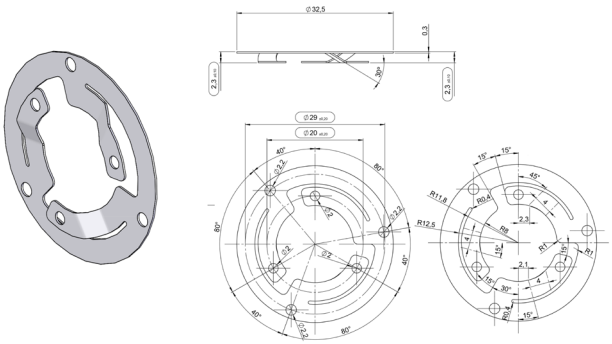

### 90.1119

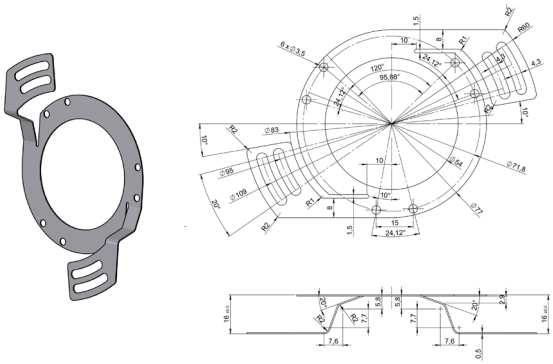

### 90.1124

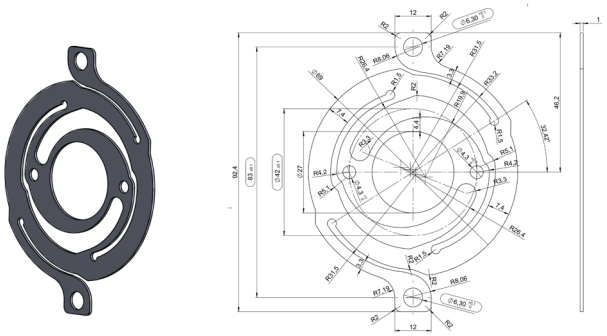

# SYSTÈME ANTI-ROTATION

## SYSTÈMES ANTI-ROTATION FLEXIBLES

### 90.1129

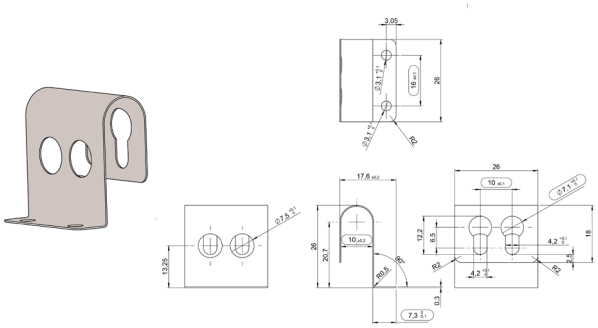

### 90.1132

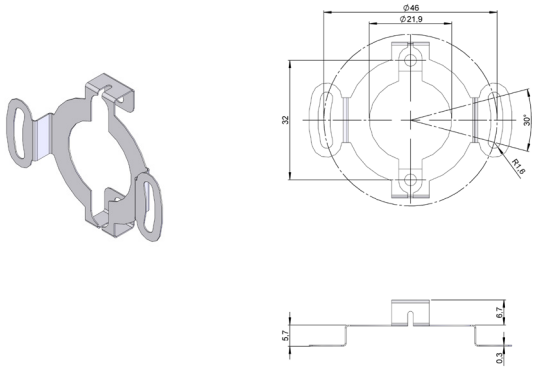

### 93.0102085

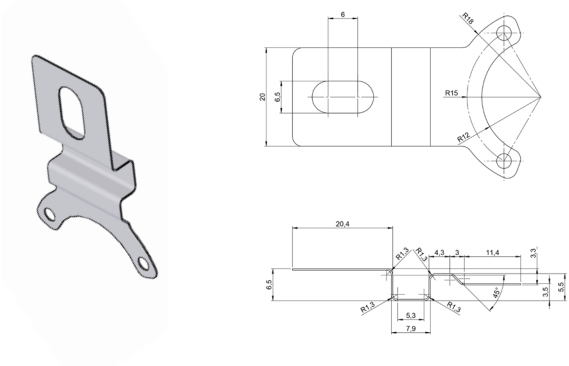

### 93.0102086

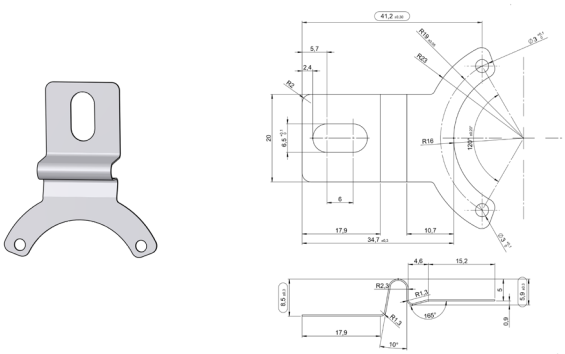

### 93.0102087

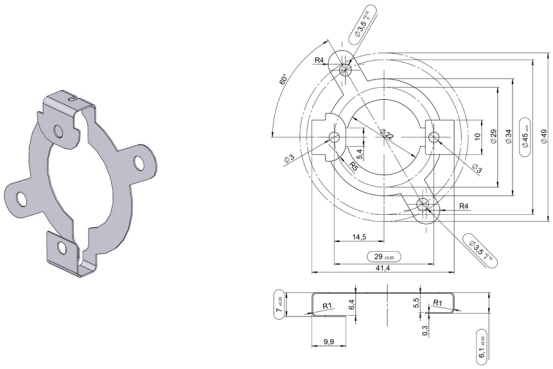

### 93.0102090

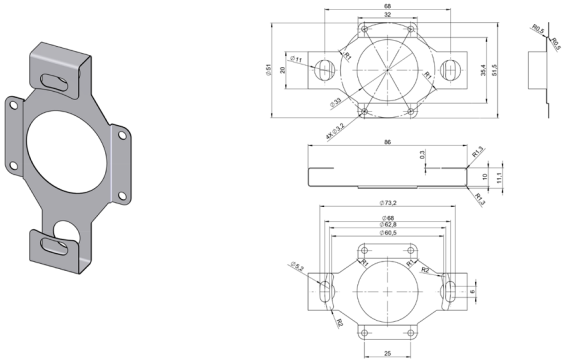

### 93.0102094

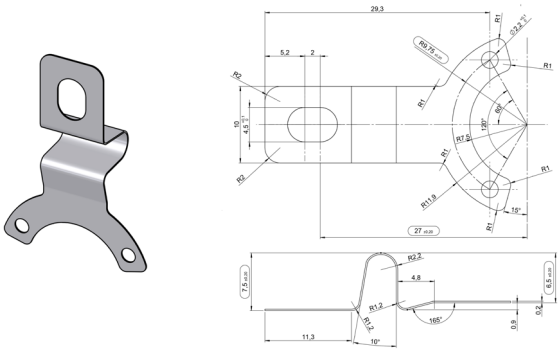

### 93.0102112

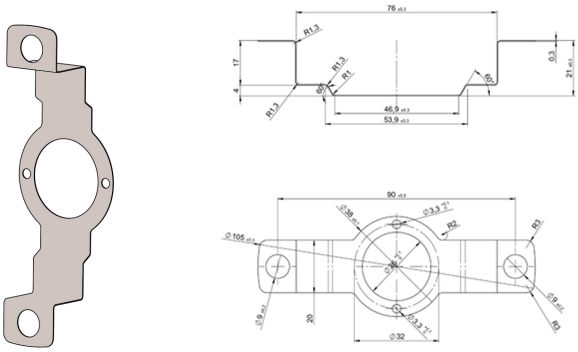



hohner AUTOMATION

# SYSTÈME ANTI-ROTATION

## SYSTÈMES ANTI-ROTATION FLEXIBLES

### 93.0102145

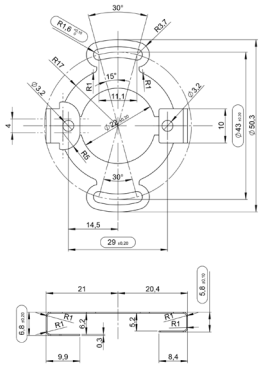

### 93.0102150

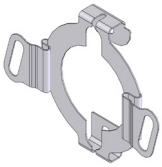

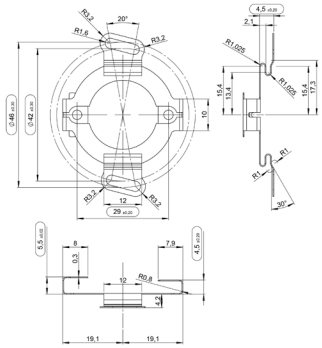

FLE_FR_01 06/24 Sujette à erreurs et modifications.
Tous droits réservés © Hohner Automation SL