SERIE E58 HM

BLIND HOLLOW SHAFT ABSOLUTE MULTITURN ENCODER

- Singleturn resolution up to 13 bits
- Multiturn resolution up to 24 bits
- Magnetic technology
- External diameter 58 mm
- Blind hollow shaft Ø 8, 10, 12, 14 and 15 mm
- Protection class IP65 according to DIN EN 60529
- Connection by cable (other cable length available) or industrial connector M23

Magnetic Encoder | Absolute Encoder | Vibration and shock resistant | IP65 | Temperature range | Express Delivery

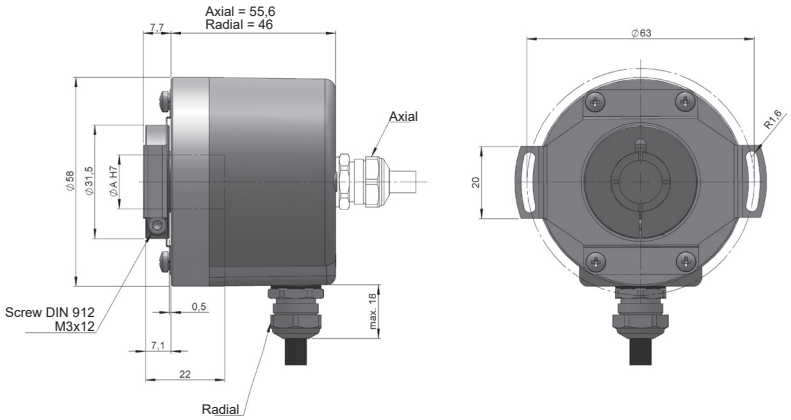

BLIND HOLLOW SHAFT	Ø A
3	8
4	10
5	12
7	14
8	15

Drawing connection type 1/2, anti-rotation system type 3 (flexible flange 90.1027)

REFERENCE

Reference example: E58HM-SSI-31221-1212

Serie	Interface	Anti-rotation system	Blind-Hollow shaft	Connection	Code	Power Supply / Electronic output	Singleturn resolution	Multiturn resolution	Special customer
E58HM -	SSI -	☐	☐	☐	☐	☐ -	☐☐	☐☐	. ☐☐☐☐
	SSI. SSI	**1.** None **2.** Flexible flange (90.1018) **3.** Flexible flange (90.1027) **4.** Flexible flange (90.1075) (*)	**3.** Ø 8 mm **4.** Ø 10 mm **5.** Ø 12 mm **7.** Ø 14 mm **8.** Ø 15 mm	**1.** Axial cable **2.** Radial cable **3.** Radial M23 12p **5.** Axial M23 12p	**1.** Binary CW **2.** Binary CCW **3.** Gray CW **4.** Gray CCW	**1.** 4,75...30 VDC / RS422	**09.** 9 bits **10.** 10 bits **11.** 11 bits **12.** 12 bits **13.** 13 bits	**12.** 12 bits **16.** 16 bits **20.** 20 bits **24.** 24 bits	**A01Z.** +105°C

Order your reference
Step file 3D

info@encoderhohner.com
service available in 24 h

(*) Anti-rotation system type 3 (flexible flange 90.1027) and 4 (flexible flange 90.1075) supplied assembled.
Anti-rotation system type 2 (flexible flange 90.1018) is supplied disassembled and includes the screws required for assembly.

SERIE E58 HM

BLIND HOLLOW SHAFT ABSOLUTE MULTITURN ENCODER

MECHANICAL SPECIFICATIONS

Materials	Housing: Zamac Flange: Aluminium Shaft: Stainless Steel
Bearings	Ballraces
Bearings lifetime	$1x10^{10}$ rev.
Housing fixing	Flexible flange (included)
Permitted misalignment	±0.5 mm axial, ±0.3 mm radial (90.1018) ±0.5 mm axial, ±0.3 mm radial (90.1027) ±0.5 mm axial, ±0.2 mm radial (90.1075)
Shaft fixing	Clamp
Blind hollow shaft diameter	8, 10, 12, 14 and 15 mm
Maximum number of revolutions permitted mechanically	6000 rpm - Standard 10000 rpm - Upon request 12000 rpm (≤ 12 bits) - Upon request
Protection against dust and splashes according to DIN EN 60529	IP65
Rotor inertia moment	2 gcm^2
Starting torque at 20°C (68°F)	≤ 0,02 Nm
Maximum load permitted on axial shaft	20 N
Maximum load permitted on radial shaft	40 N
Weight aprox.	0,5 Kg
Operating temperature range	-40°C to +85°C - Standard -40°C to +105°C - Special Customer A01Z
Vibration according to DIN EN 60068-2-6	100 m/s^2 (10Hz...2000Hz)
Shock according to DIN EN 60068-2-27	1000 m/s^2 (6ms)
Axial or radial connection	2 meters cable or industrial connector M23 (other cable lengths available on order) Female connector not included

ELECTRICAL SPECIFICATIONS

Interface	SSI
Electronic output	RS422
Power supply (VCC)	4,75...30 VDC
Consumption	≤ 100 mA
Code	Binary Gray
Protocol	SSI
Singleturn resolution	up to 13 bits
Multiturn resolution	up to 24 bits
Absolute accuracy	±0,35°
Relative accuracy	±1,5 LSB
Max. load capability / channel	±20 mA
"Low" signal level	< 0,8 VDC
"High" signal level	2 ... 5,5 VDC
Frequency	50 kHz...2 MHz
Short circuit protection	Yes
Protection polarity inversion	Yes

CONNECTION

	Cable 8x0,14 mm^2 95.0008052	**Connector** M23 12p CW
GND	White	1
VCC	Brown	2
DATA+	Yellow	3
DATA-	Pink	4
CLK+	Green	5
CLK-	Grey	6
PRESET*	Red	7
DIR**	Blue	8

(*) Apply a 4,75...30 VDC pulse (more than 1 ms) to set the encoder to Zero and reboot the encoder (turn off and then turn on the power supply).
(**) Connect to 4,75...30 VDC to change direction from default. If this input is not used, it should be connected to GND in order to avoid interferences. The encoder must be always rebooted (turn off and then turn on the power supply) after switching.

CONNECTION DIMENSIONS

Female connector not included

Connection 3

Radial
M23 12p
male panel
clockwise

Connection 5

Axial
M23 12p
male panel
clockwise

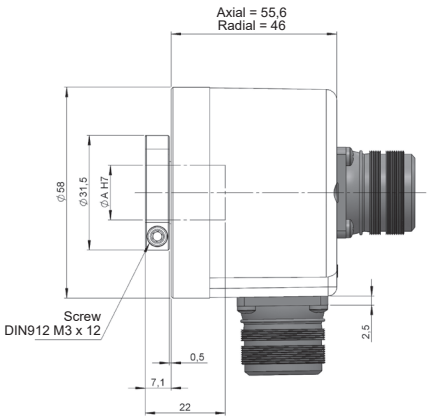

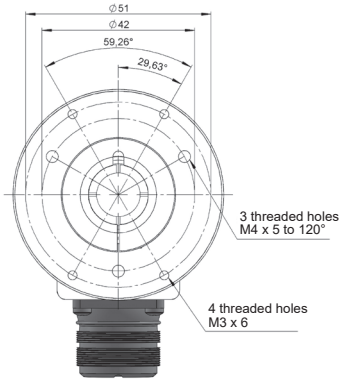

Female connector
95.0007131

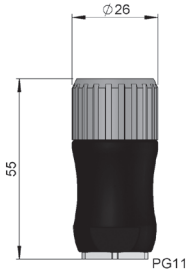

ANTI-ROTATION SYSTEMS DIMENSIONS

Anti-rotation system 2
Flexible flange
90.1018

90.1018

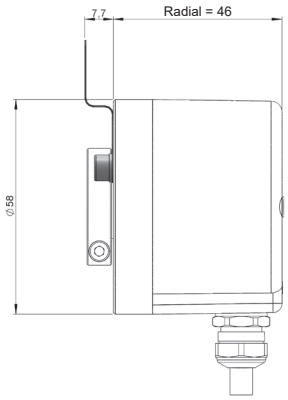

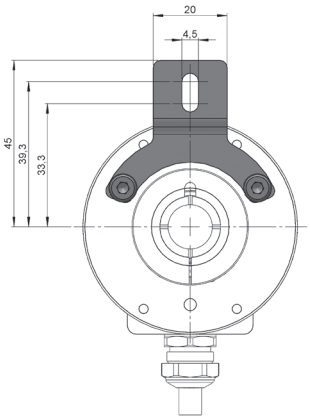

Anti-rotation system 4
Flexible flange
90.1075

90.1075

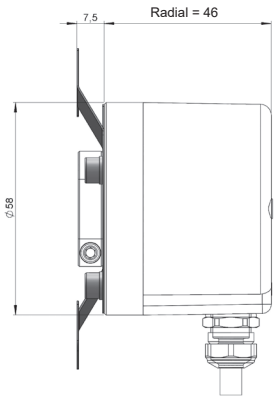

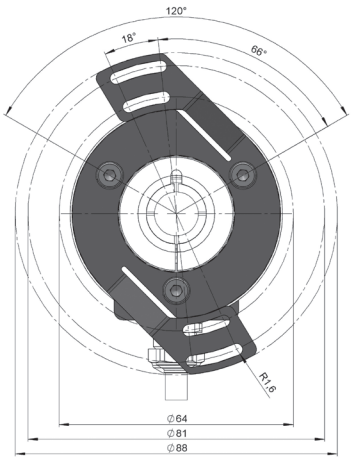

E58HM-SSI_EN_01 08/23 Subject to errors and changes.
All rights reserved © Hohner Automation SL